BSSIL - STRAIGHT IN LOCKING BASE SHOE

ASY1-075

INSTALLATION INSTRUCTIONS

Insert the base shoe into the upright. Engage the latch by pushing it into the slot of the upright.
The latch must be completely engaged in the slot before installing the base shelves!

NOTE!

SEE WARNING LABEL ON BASE SHOE!

WARNING! / AVISO!

SHELVING SYSTEM MAY COLLAPSE IF BASE SHOE IS NOT INSTALLED PROPERLY! LATCH MUST BE COMPLETELY ENGAGED AND PIN HOLES MUST ALIGN TO HOLD A .150" TO .180" DIAMETER PIN!

INSTALLATION: INSERT SHOE INTO BASE OF UPRIGHT AND PRESS DOWN UNTIL LATCH ENGAGES

LATCH ENGAGED AND PIN HOLES ALIGNED!

CORRECT! CORRECTO!

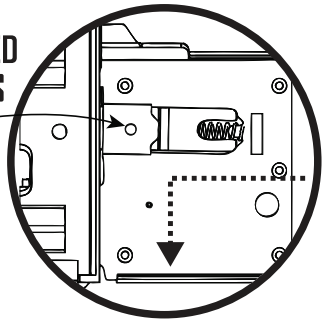

LATCH NOT ENGAGED! PIN HOLES NOT ALIGNED!

INCORRECT! INCORRECTO!

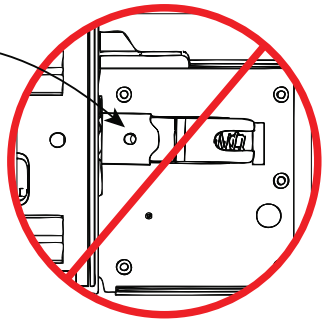

madix™ STORE FIXTURES
P.O. BOX 729 / TERRELL, TEXAS 75160 / 972.563.5744 / 800.776.2349
P.O. BOX 177 / GOODWATER, ALABAMA 35072 / 256.839.6354 / 800.633.6282

REV

REV#	ECN#	REVISION	BY	DATE

REV#	ECN#	REVISION	BY	DATE