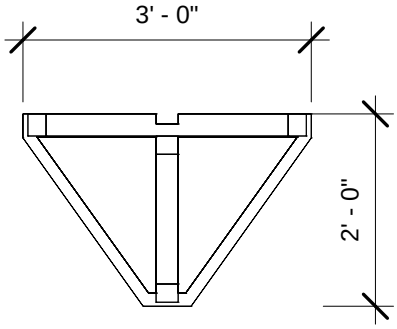

PLAN

3D PERSPECTIVE

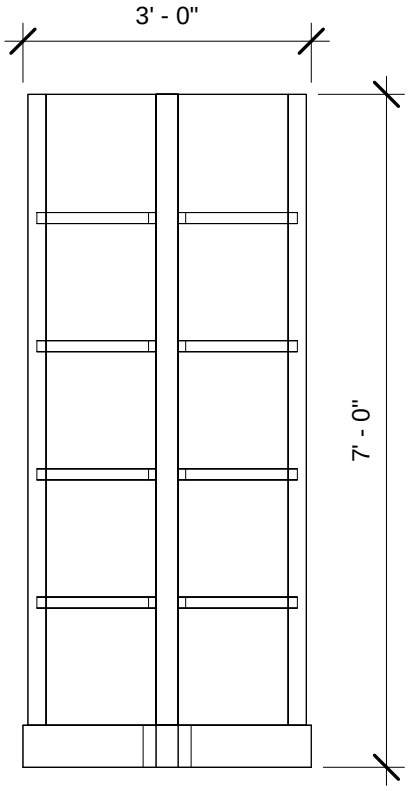

FRONT ELEVATION

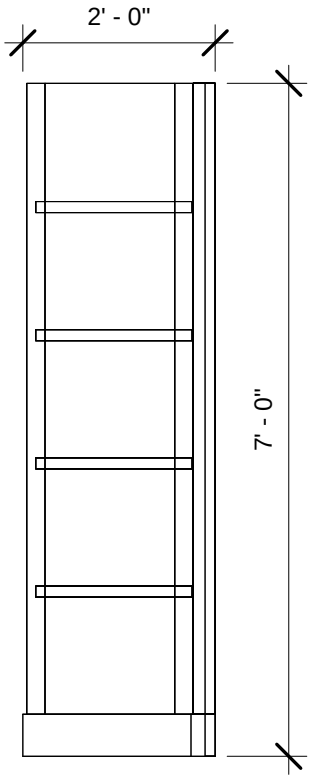

SIDE ELEVATION

Triangular End Cap

madix INNOVATION ON DISPLAY	Madix Revit Family	Architectural View	
www.madixinc.com		Project number 12056-150	TC3
		Date 7-6-12	
		Drawn by AS	
		Checked by ND	Scale 1/2" = 1'-0"

7/6/2012 10:29:55 AM