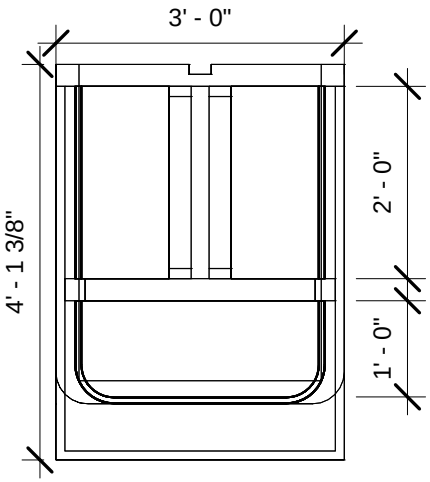

PLAN

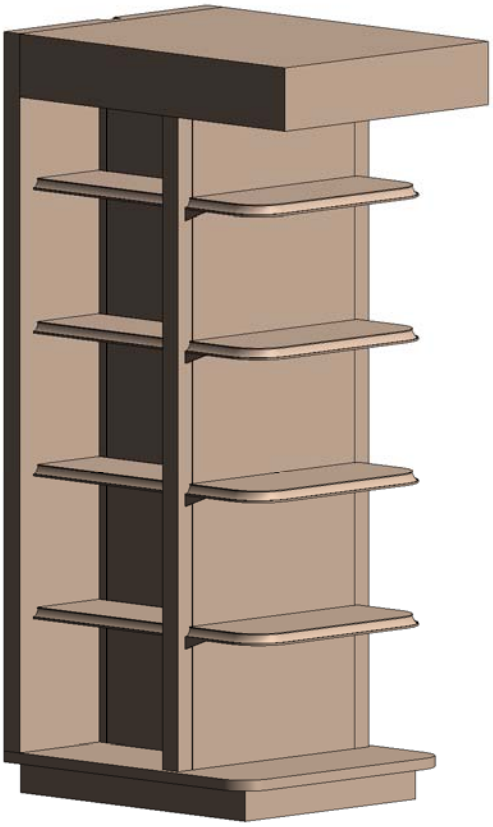

3D PERSPECTIVE

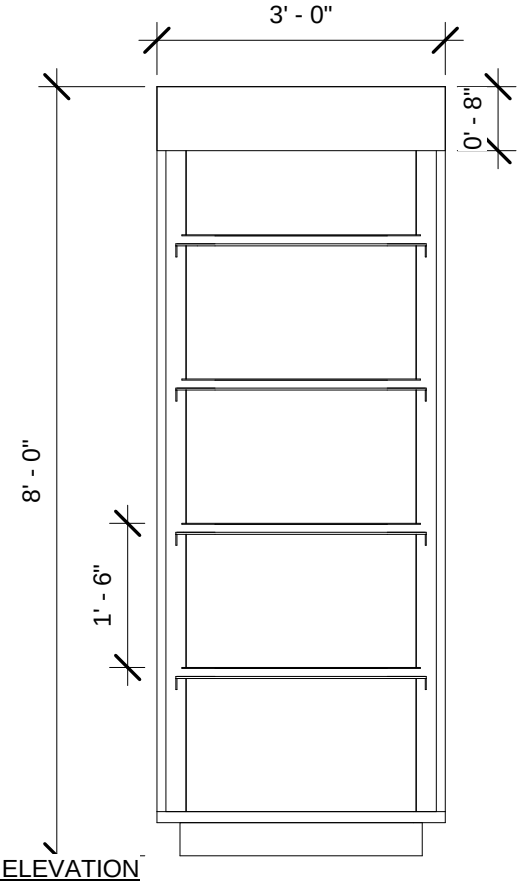

FRONT ELEVATION

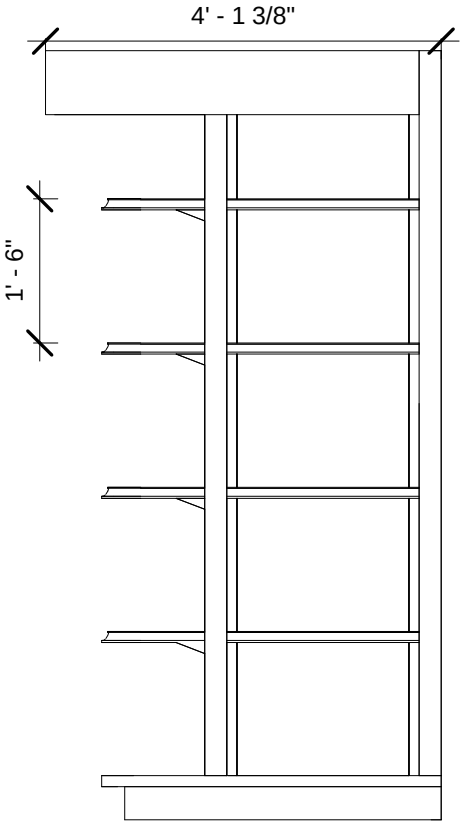

SIDE ELEVATION

3 Way Display

madix
INNOVATION ON DISPLAY

www.madixinc.com

Madix Revit Family

Architectural View

Project number	12056-150	ML20
Date	6-19-12	
Drawn by	AS	
Checked by	ND	Scale 1/2" = 1'-0"

6/19/2012 2:38:48 PM