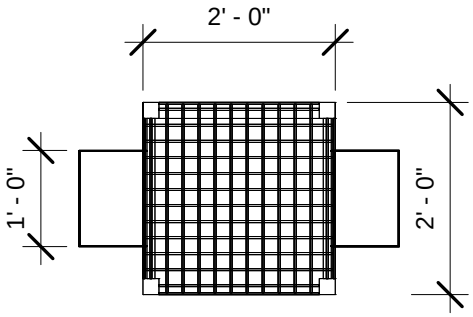


PLAN

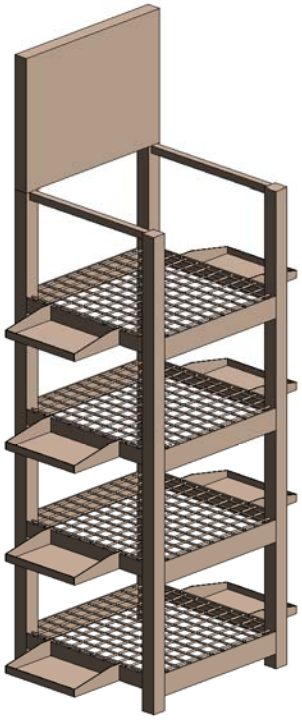

3D PERSPECTIVE

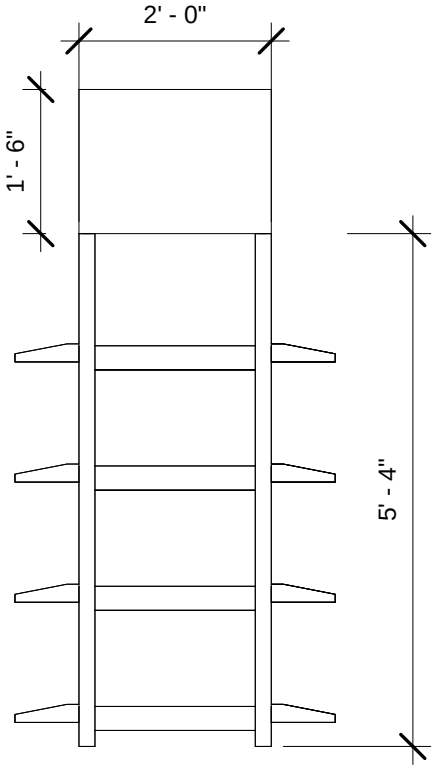


FRONT ELEVATION

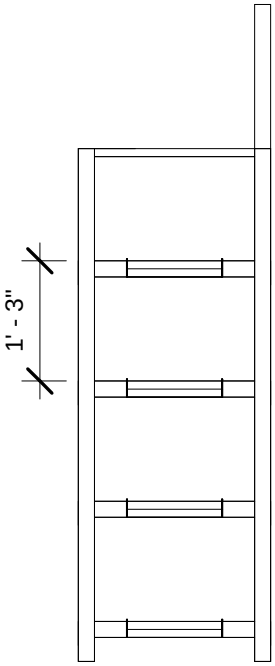


SIDE ELEVATION

Battery Rack Kit

madix™
INNOVATION ON DISPLAY

www.madixinc.com

Madix Revit Family

# Architectural View

| | | |
|---|---|---|
| Project number | 12056-150 | BR |
| Date | 6-27-12 | |
| Drawn by | AS | |
| Checked by | ND | Scale 1/2" = 1'-0" |

6/27/2012 8:04:44 AM