REV.	DESCRIPTION	DATE
02	UPDATED TO GEN4 INFORMATION.	5/16/2023

DAISY CHAIN CONFIGURATION:

USED TO RUN A SINGLE ROW OF HORIZONTAL LIGHTING.

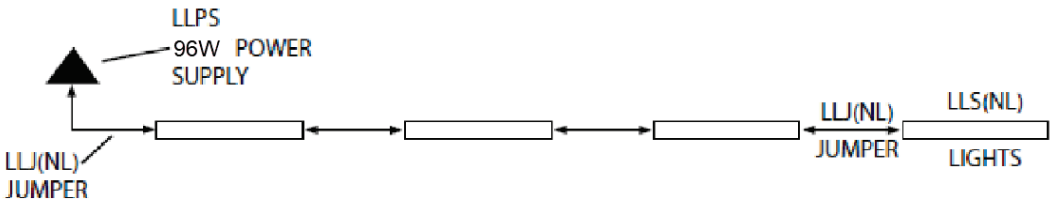

HARNESS CONFIGURATION:

USED TO RUN POWER IN A VERTICAL DIRECTION TO LIGHTS PLACED ON A STACK OF SHELVES, OR THOSE IN CLOSE PROXIMITY TO ONE ANOTHER.

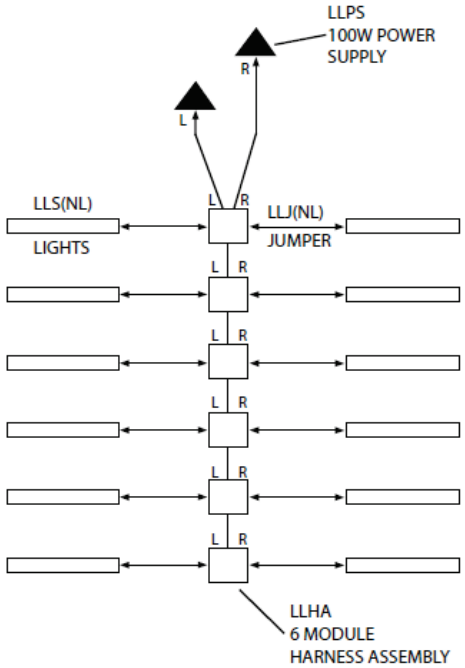

-LLHA HARNESS ASSEMBLY IS USED TO CONNECT UP TO 6 LEDge LIGHTS TO A SINGLE 96W POWER SUPPLY.

-UP TO 12 LEDge LIGHTS MAY BE CONNECTED TO A SINGLE LLHA HARNESS ASSEMBLY BY USING 2 96W POWER SUPPLIES.

-HARNESS ASSEMBLIES WILL PLUG DIRECTLY INTO THE POWER SUPPLIES.

NOTE: REFERENCE TABLE BELOW IS THE MAXIMUM NUMBER OF 24", 36", AND 48" LEDge LIGHTS THAT CAN BE CONNECTED TO A SINGLE 96W POWER SUPPLY.

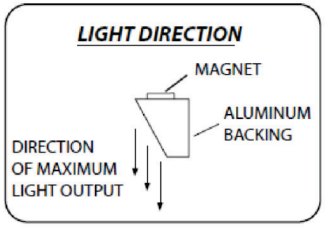

CRITICAL: THE SUM OF ANY COMBINATION OF LIGHTS CONNECTED TO A POWER SUPPLY MUST NOT EXCEED THE 96W POWER SUPPLY RATING.

THE NUMBER OF POWER SUPPLIES IS DETERMINED USING 80% OF THE SUPPLY CIRCUIT RATING.

U.S. WALL VOLTAGE IS NOMINAL 120V. AMPS=WATTS/VOLTS

= LEDge LIGHT

= 96W POWER SUPPLY

= MODULE HARNESS

GENERATION 4 LEDge/BEAM

ITEM	PN	WATTS	LIGHTS PER PS
48" LEDge	LLS48	5.4	17
36" LEDge	LLS36	4.0	24
24" LEDge	LLS24	2.8	34
48" BEAM	LLB48	12.8	7
36" BEAM	LLB36	9.6	10

LIGHTS PER CIRCUIT

CIRCUIT AMPS	POWER SUPPLIES	LLS48 PER CIRCUIT
15	8	136
20	11	187

ABOVE ASSUMES FULLY LOADED POWER SUPPLY.

madix

INSTALLATION INSTRUCTIONS

20984 AL HWY 9 GOODWATER, AL 35072 256-839-6354
PO BOX 729 TERRELL, TX 75160 214-515-5400

DWG NO.: **ASY-80017242**

CHANGE #: 500000025725

DESC: ASY FOR LEDge LIGHTING | 02

DATE: 20230522 | DESIGNER: NDOTSON | SHEET 1 OF 4

ASY - LEDge LIGHTING

LLDCS-(TYPE), DIMMING CONTROLLER STARTER KIT KIT CONTAINS ITEMS FOR THE DIMMING CONTROL AND MOTION SENSOR ONLY. LIGHTS AND JUMPERS FOR THE LIGHTS ARE SHOWN FOR REFERENCE ONLY AND ARE NOT INCLUDED IN THE LLDCS KITS.

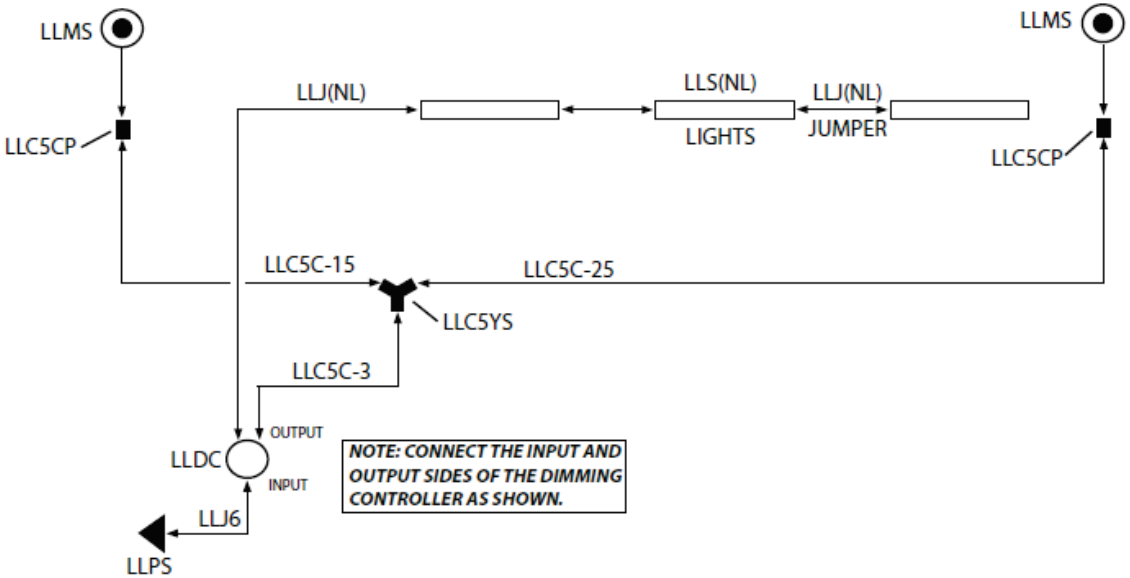

NOTE: CONNECT THE INPUT AND OUTPUT SIDES OF THE DIMMING CONTROLLER AS SHOWN.

LLDCS-B FOR UPRIGHT MOUNTED SENSORS

PART #	DESCRIPTION	QTY
LLDC	DIMMING CONTROL	1
LLMS	MOTION SENSOR	2
LLC5YS	Y-SPLITTER	1
LLC5CP	CAT 5 COUPLER	2
LLC5C-3	CAT 5 CABLE 3'	1
LLC5C-15	CAT 5 CABLE 15'	1
LLC5C-25	CAT 5 CABLE 25'	1
LLSMB-B	MOUNTING BRACKET	2
LLJ6	JUMPER CABLE 6"	1

LLDCS-S FOR SHELF MOUNTED SENSORS

PART #	DESCRIPTION	QTY
LLDC	DIMMING CONTROL	1
LLMS	MOTION SENSOR	2
LLC5YS	Y-SPLITTER	1
LLC5CP	CAT 5 COUPLER	2
LLC5C-3	CAT 5 CABLE 3'	1
LLC5C-15	CAT 5 CABLE 15'	1
LLC5C-25	CAT 5 CABLE 25'	1
LLSMB-S	MOUNTING BRACKET	2
LLJ6	JUMPER CABLE 6"	1

■ = CAT 5 COUPLER

▲ = 96W POWER SUPPLY

○ = DIMMING CONTROLLER

⊙ = MOTION SENSOR

Y = Y-SPLITTER

DIMMING CONTROLLER SETTINGS

DC HAS 4 SWITCHES. ON IS LABELED

- THE ON/OFF COMBINATIONS OF THE FIRST TWO SWITCHES DETERMINES HOW FAST THE LIGHTS RAMP UP TO FULL BRIGHTNESS. SEE TABLE BELOW.

SW 1	SW 2	SW 3	SW 4	RAMP TIME (SECONDS)
OFF	OFF	X	X	1.50
ON	OFF	X	X	1.25
OFF	ON	X	X	1.00
ON	ON	X	X	0.75

- THE ON/OFF COMBINATIONS OF THE LAST TWO SWITCHES DETERMINES THE LIGHT INTENSITY WHEN DIMMED DOWN. SEE TABLE BELOW (PERCENTAGE IS PERCENTAGE OF MAX INTENSITY)

SW 1	SW 2	SW 3	SW 4	LIGHT INTENSITY
X	X	OFF	OFF	OFF
X	X	ON	OFF	12.5%
X	X	OFF	ON	25%
X	X	ON	ON	50%

madix

INSTALLATION INSTRUCTIONS

20984 AL HWY 9 GOODWATER, AL 35072 256-839-6354
PO BOX 729 TERRELL, TX 75160 214-515-5400

DWG NO.: **ASY-80017242**

CHANGE #: 500000025725

DESC: ASY FOR LEDge LIGHTING | 02

DATE: 20230522 | DESIGNER: NDOTSON | SHEET 2 OF 4

ASY - LEDge LIGHTING

LLDCA, DIMMING CONTROL ADD-ON KIT

PART #	DESCRIPTION	QTY
LLDC	DIMMING CONTROL	1
LLC5YS	Y-SPLITTER	1
LLC5C-3	CAT 5 CABLE 3'	1
LLC5C-15	CAT 5 CABLE 15'	1
LLJ6	JUMPER CABLE 6"	1

USE THIS KIT TO CONTROL ADDITIONAL POWER SUPPLIES. USE ONLY ONE DIMMING CONTROLLER PER POWER SUPPLY. REFER TO SHEET ONE FOR MAX # OF LIGHTS TO CONNECT TO A SINGLE POWER SUPPLY. NEW ITEMS ARE MARKED WITH AN (*).

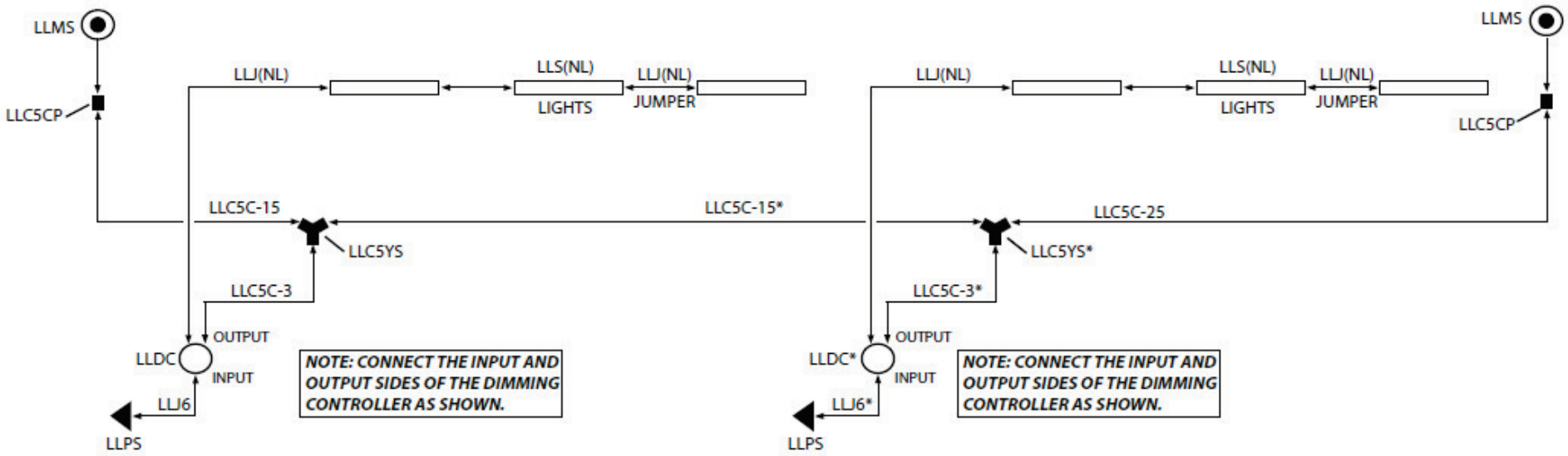

■	= CAT 5 COUPLER
▲	= 96W POWER SUPPLY
○	= DIMMING CONTROLLER
⊙	= MOTION SENSOR
Y	= Y-SPLITTER

madix

INSTALLATION INSTRUCTIONS

20984 AL HWY 9 GOODWATER, AL 35072 256-839-6354
PO BOX 729 TERRELL, TX 75160 214-515-5400

DWG NO.: **ASY-80017242**

CHANGE #: 500000025725

DESC: ASY FOR LEDge LIGHTING | 02

DATE: 20230522 | DESIGNER: NDOTSON | SHEET 3 OF 4

ASY - LEDge LIGHTING

LLMSA-(TYPE), MOTION SENSOR ADD-ON KIT

LMSA-(TYPE) KITS ARE USED WHEN AN ADDITIONAL MOTION SENSOR IS NEEDED. (I.E. IN THE MIDDLE OF A RUN THAT EXCEEDS 16') KITS ADD A SINGLE SENSOR TO THE LLDCS-(TYPE) STARTER KITS. NEW ITEMS ARE MARKED WITH AN (*).

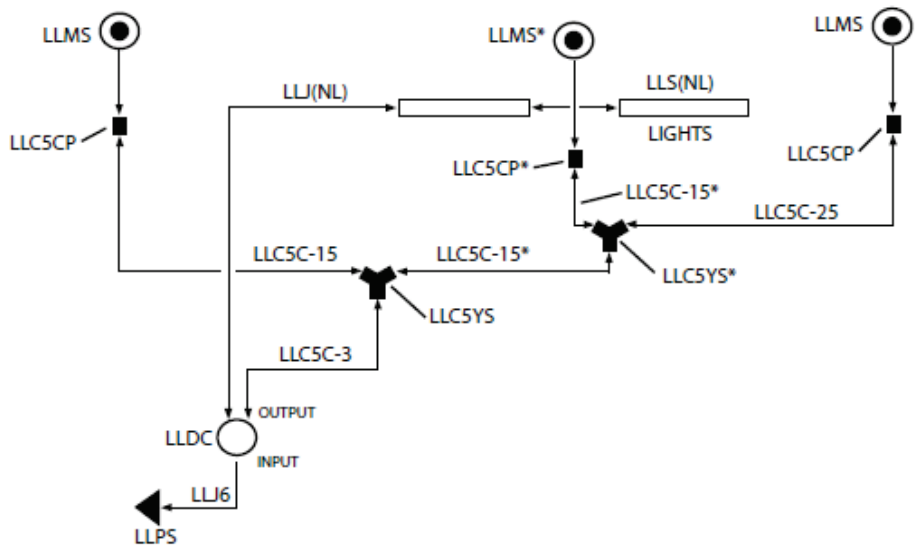

LLMSA-B FOR SHELF MOUNTED SENSORS

PART #	DESCRIPTION	QTY
LLMS	MOTION SENSOR	1
LLC5YS	Y-SPLITTER	1
LLC5CP	CAT 5 COUPLER	1
LLC5C-15	CAT 5 CABLE 15'	2
LLSMB-B	MOUNTING BRACKET	1

LLMSA-S FOR UPRIGHT MOUNTED SENSORS

PART #	DESCRIPTION	QTY
LLMS	MOTION SENSOR	1
LLC5YS	Y-SPLITTER	1
LLC5CP	CAT 5 COUPLER	1
LLC5C-15	CAT 5 CABLE 15'	2
LLSMB-S	MOUNTING BRACKET	1

BACK OF MOTION SENSOR

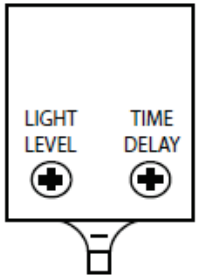

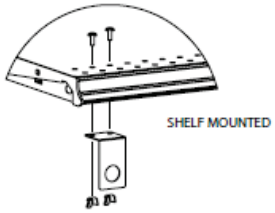

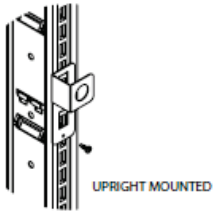

MOTION SENSOR LOCATIONS
SEE DIAGRAM TO LEFT FOR BRACKET INSTALLATION.

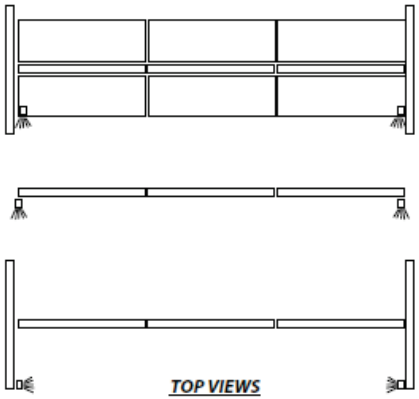

TOP VIEWS

MOTION SENSOR SETTINGS

-RANGE, 14 FT DIAMETER (7 FT RADIUS)

-RED INDICATOR LIGHT SHOWS WHEN MOTION IS DETECTED.

-SENSORS TAKE 2-5 MINUTES TO WARM UP AFTER THEY ARE TURNED ON.

-TIME DELAY IS THE LENGTH OF TIME AFTER THE SENSORS DETECT MOTION TILL THE LIGHTS DIM.
 -MIN SETTING=30 SECS
 -MAX SETTING=30 MINUTES

-ADJUST LIGHT LEVEL TO IT'S MAXIMUM SETTING BY TURNING FULLY CLOCKWISE

madix

INSTALLATION INSTRUCTIONS

20984 AL HWY 9 GOODWATER, AL 35072 256-839-6354
PO BOX 729 TERRELL, TX 75160 214-515-5400

DWG NO.: **ASY-80017242**

CHANGE #: 500000025725

DESC: ASY FOR LEDge LIGHTING		02
DATE: 20230522	DESIGNER: NDOTSON	SHEET 4 OF 4