ASY FOR SLIDING PANELS

THIS ASY INSTRUCTION CAN BE USED FOR
ANY TOP AND BOTTOM COMBINATION OF:
SPPHDBTB(48)-(S12) - BOTTOM TRACK WITH BIN
SPPHDBT(NW)-(OPT) - BOTTOM TRACK, SINGLE OR DOUBLE
SPPHDTT(NW)-(OPT) - TOP TRACK, SINGLE OR DOUBLE
SPPFHD(NW)(NH) - SLIDING PANELS

PANEL HEIGHT	DIM "A"	MIN HEIGHT OF UPRIGHT
NH 34	38.000"	NH 52 MINIMUM
NH 38	42.000"	NH 56 MINIMUM
NH 48	52.000"	NH 66 MINIMUM

NOTE: MINIMUN UPRIGHT HEIGHTS SHOWN WILL NOT WORK WITH THE SPPHDBTB. THE MINIMUM HEIGHTS WILL NEED TO BE AT LEAST 2" TALLER FOR THESE.

1: FOR CROSS BAR VERSION, INSERT THE CROSS BAR AT THE HEIGHTS SHOWN BELOW. IF THE EXTENDED BRACKET VERSION IS USED USED INSERT THE TOPTRACK AT THE HEIGHT DESIRED AND THEN INSERT THE BOTTOM TRACK AS SHOWN. IF USING EXTENDED BRACKET VERSION SKIP TO STEP 3.

2: CENTER TOP TRACK ON CROSS BARS AS SHOWN AND SECURE USING (1) BOLT AND (1) NUT ON EACH END. CENTER BOTTOM TRACK AND SECURE USING (2) TEK SCREWS ON EACH END. NOTE: THIS LAYOUT ONLY WORKS WITH THE CROSS BAR VERSION.

3: INSTALL THE SLIDING PANELS BY INSERTING INTO THE TOP TRACK AS SHOWN AND THEN TILT THE PANEL OVER THE BOTTOM TRACK. THEN LOWER UNTIL THE PANEL REST ON THE LOWER TRACK.

4: INSTALL SPINNERS ON BOTH SIDES OF THE TRACKS. REFERENCE ASY-80015794 FOR SPINNER INSTALLATION INSTRUCTIONS. NOTE: SPINNERS ARE USED WITH THE CROSS BAR VERSION ONLY.

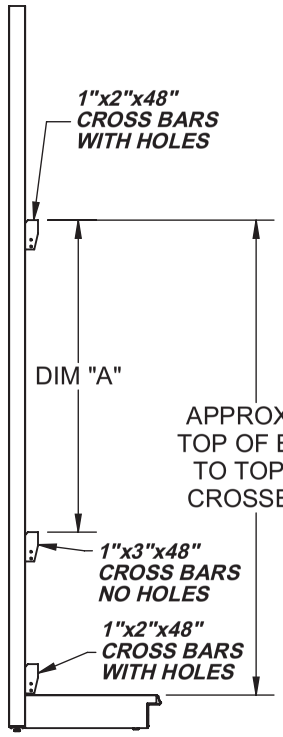

CROSS BAR VERSION

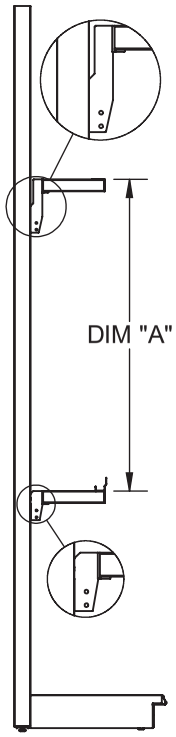

EXTENDED BRACKET VERSION

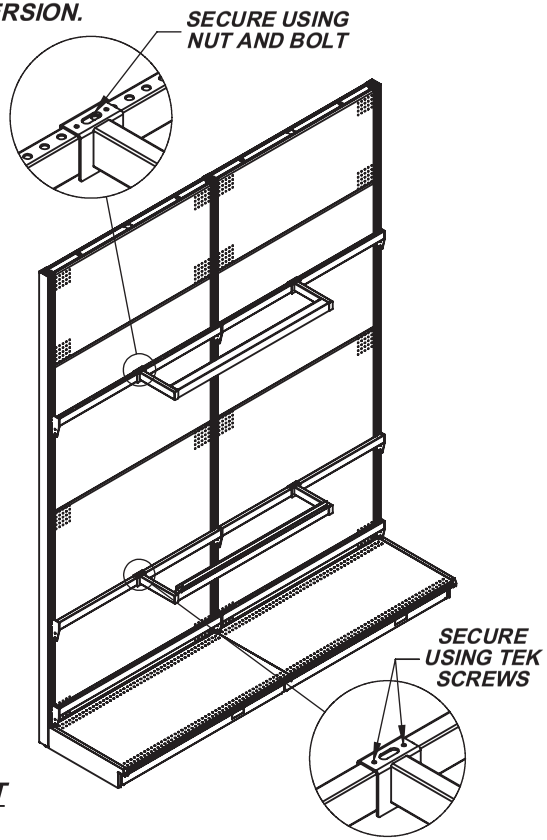

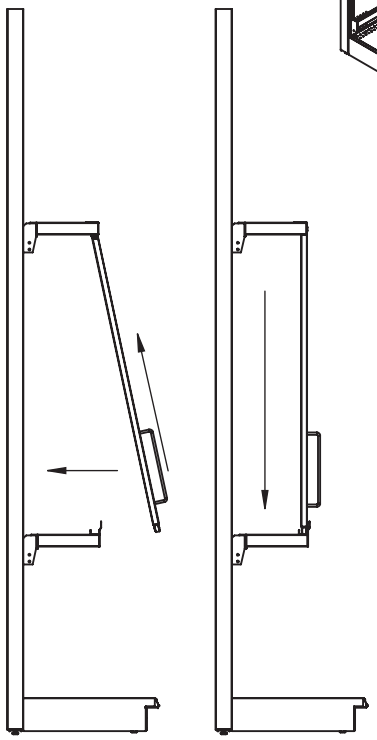

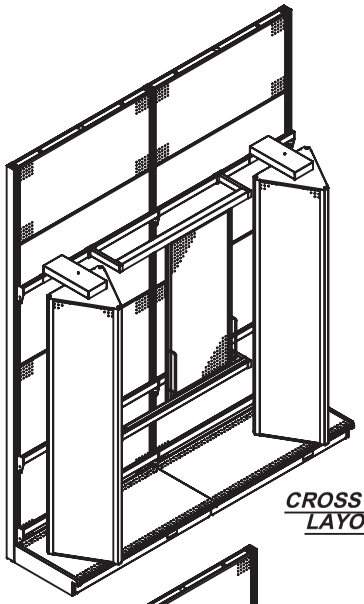

CROSS BAR LAYOUT

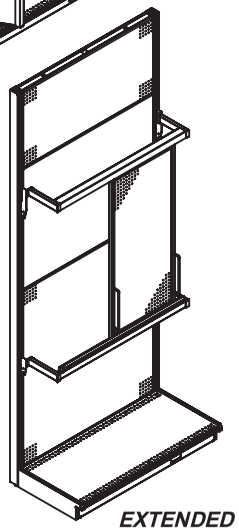

EXTENDED BRACKET LAYOUT

madix

Asy-80015795

P.O. BOX 729 TERRELL, TEXAS 75160
214-515-5400 / 800-776-2349

PAGE 1 OF 1 REV. 02

04/20/09 SRT ECM # 500000006398