ASY FOR 3-WAY TOOL DISPLAY

REV.	DESCRIPTION	DATE
01	UPDATED WITH LATEST DESIGN CHANGES	2/24/2009

1: INSERT CROSS BARS AS SHOWN.

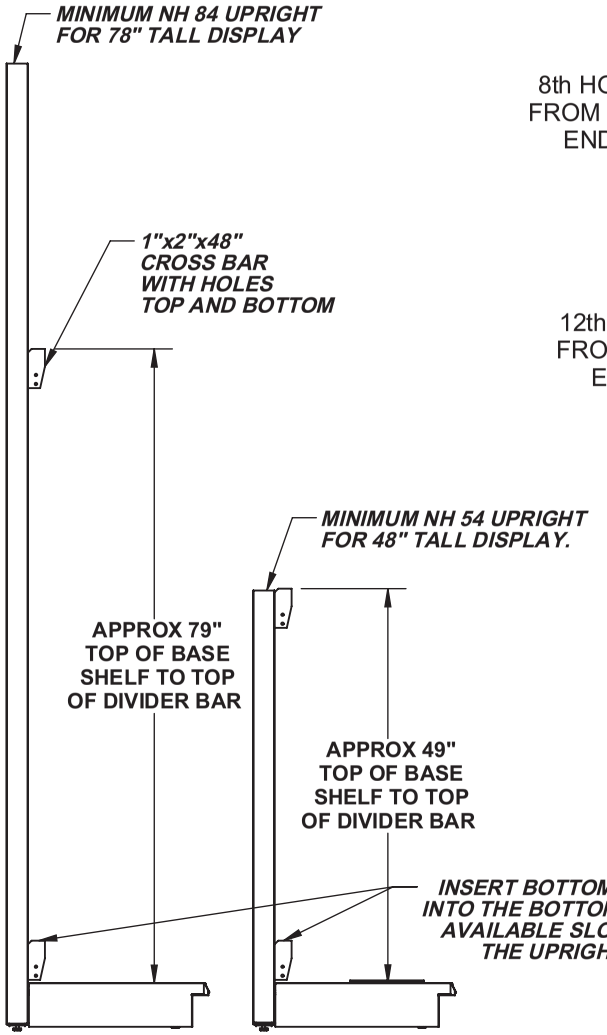

2: ATTACH SPINNER PLATES TO THE CROSS BARS USING THE 5/16-18x2.5" BOLT AND 5/16-18 HEX NUT AS SHOWN.

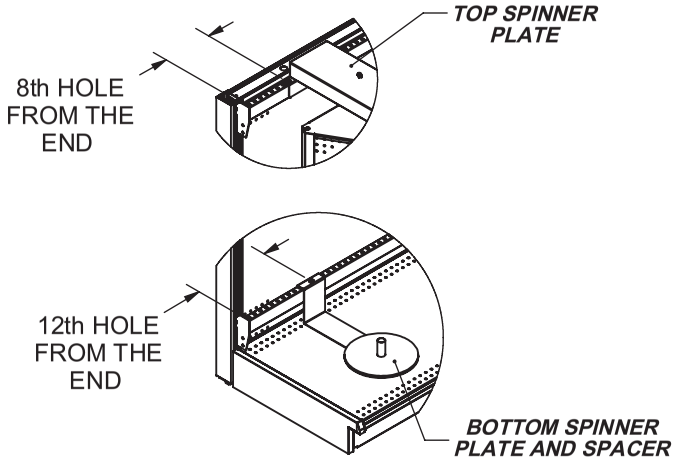

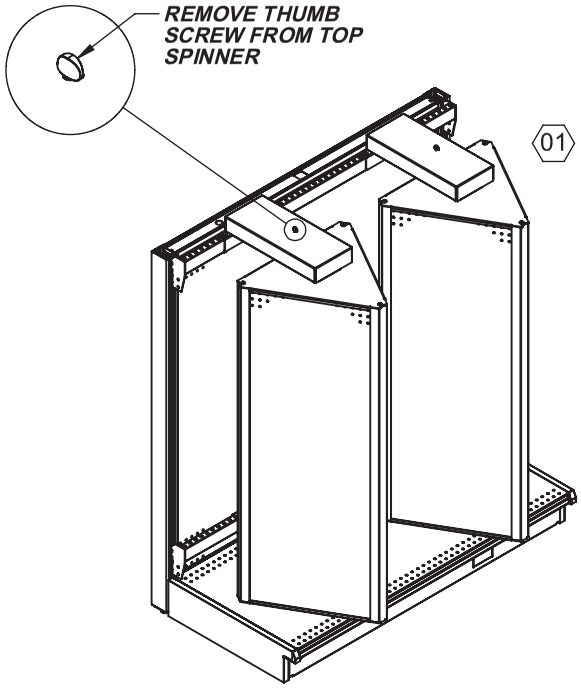

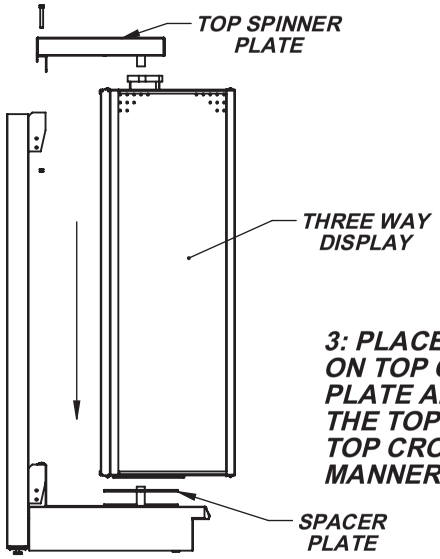

3: PLACE THREE WAY DISPLAY ON TOP OF THE BOTTOM SPINNER PLATE AND SECURE BY ATTACHING THE TOP SPINNER PLATE TO THE TOP CROSS BAR IN THE SAME MANNER AS THE BOTTOM PLATE.

4: ONCE TOP SPINNER IS SECURED ROTATE THE DISPLAY SLIGHTLY UNTIL PRESSURE IS REMOVED FROM THE THUMB SCREW ON THE TOP SPINNER. REMOVE THE THUMB SCREW FROM THE TOP SPINNER AND RELEASE THE DISPLAY. THUMB SCREW CAN BE SAVED FOR LATER USE IF NEEDED.

REPEAT STEPS 1 THROUGH 4 FOR OTHER SIDE OF THE SECTION.

madix

Asy-80015794

P.O. BOX 729 TERRELL, TEXAS 75160
214-515-5400 / 800-776-2349

PAGE 1 OF 1 REV. 01

12/16/08 CAB ECM # 500000006167