ASY FOR CART RAIL

REV.	DESCRIPTION	DATE

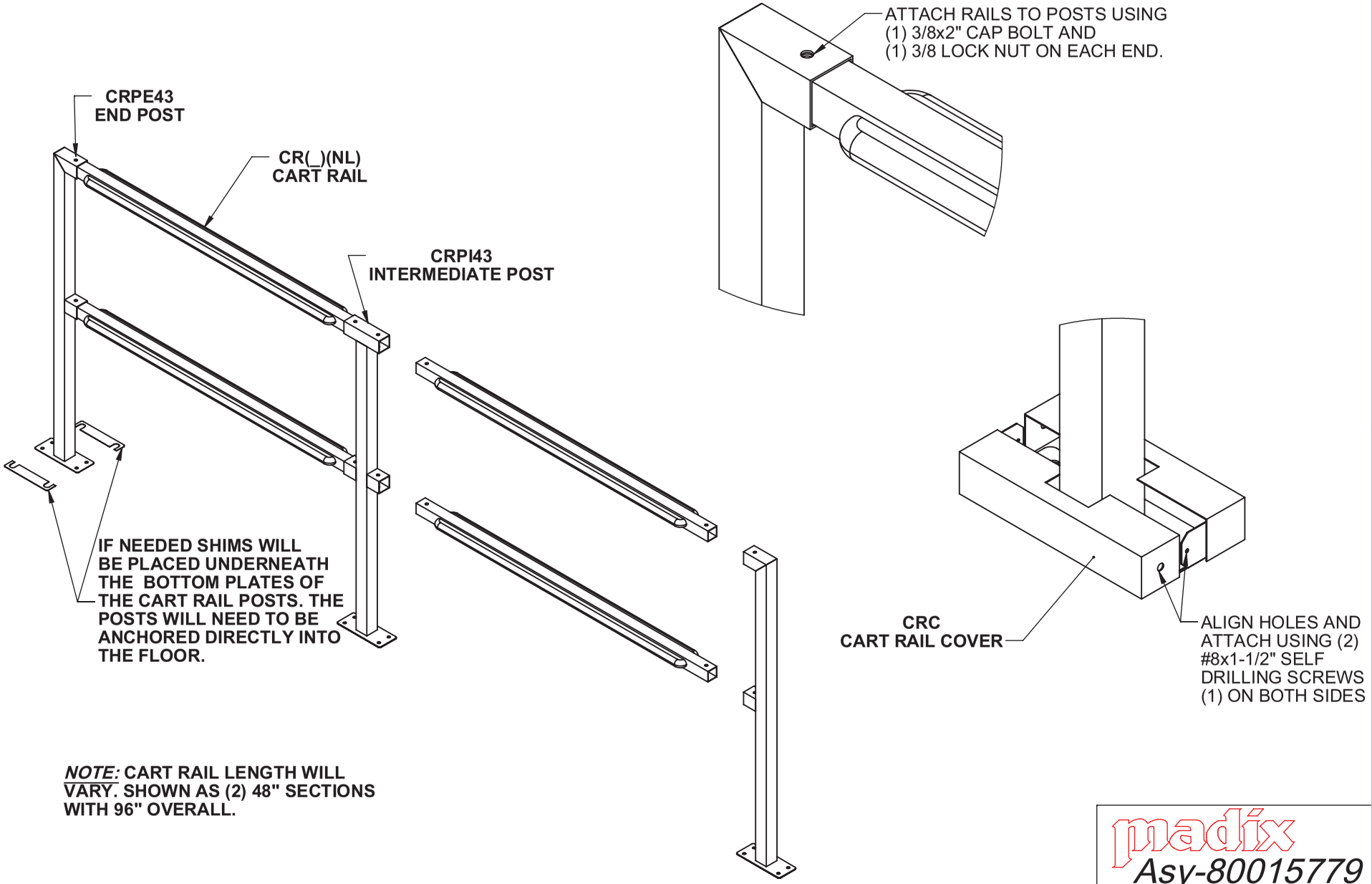

NOTE: **CART RAIL LENGTH WILL VARY. SHOWN AS (2) 48" SECTIONS WITH 96" OVERALL.**

madix

Asy-80015779

P.O. BOX 729 TERRELL, TEXAS 75160
214-515-5400 / 800-776-2349

PAGE 1 OF 2 REV. 00

12/15/08 CAB ECM # 500000005886

ASY FOR CART RAIL HARNESS

OPTIONAL HARNESS MAY OR MAY NOT BE NEEDED.
HARNESS WILL ONLY WORK WITH TUBELINE WALL SECTIONS.

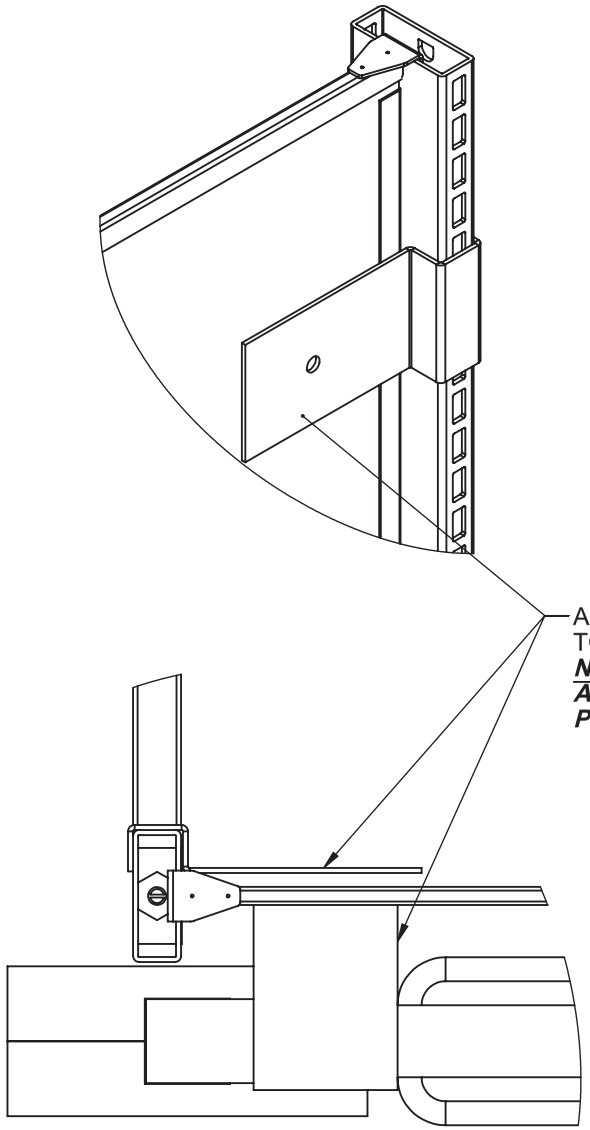

ATTACH HARNESS PIECES TOGETHER USING (1) 3/8 BOLT.
NOTE: WILL NEED TO DRILL A 3/8" HOLE INTO THE BACK PANEL FOR THE BOLT.

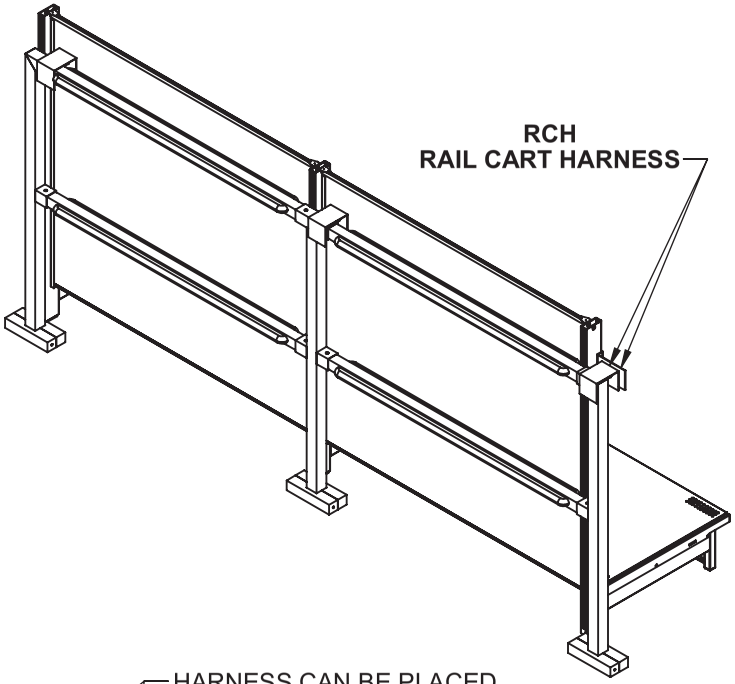

HARNESS CAN BE PLACED ON EITHER THE TOP OR THE BOTTOM CART RAIL.

madix

Asy-80015779

P.O. BOX 729 TERRELL, TEXAS 75160
214-515-5400 / 800-776-2349

PAGE 2 OF 2 REV. 00
12/15/08 CAB ECM # 500000005886