REV.	DESCRIPTION	DATE

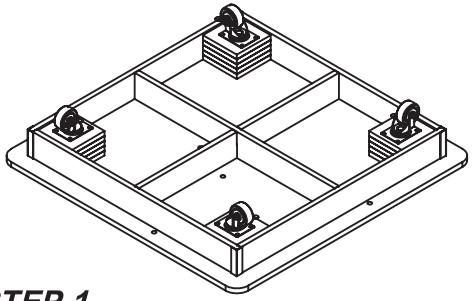

STEP 1

OPTIONAL PLATE CASTERS ARE FASTENED TO BASE WITH #12 X 1" SCREWS, (4) PER CASTER

TOP VIEW

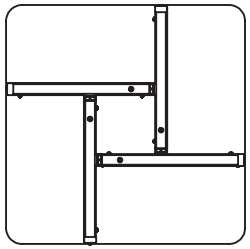

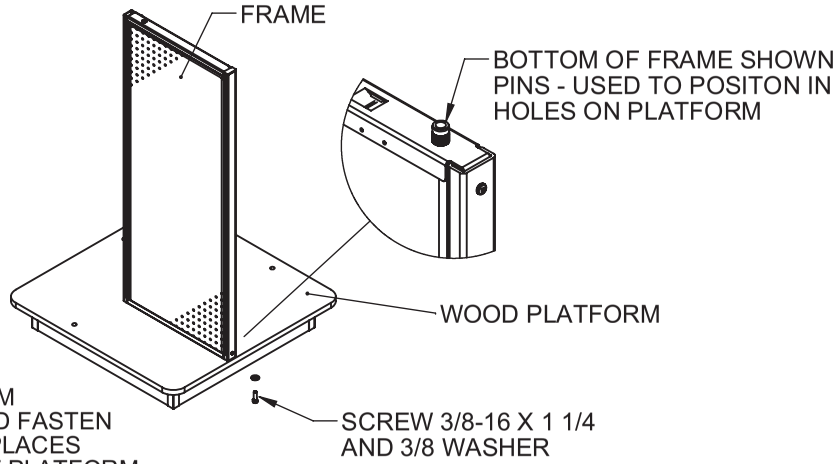

STEP 2

POSITION FRAMES ON PLATFORM ALIGNING PINS OVER HOLES AND FASTEN WITH 3/8-16 X 1 1/4" SCREWS, 4 PLACES THROUGH THE BOTTOM SIDE OF PLATFORM.

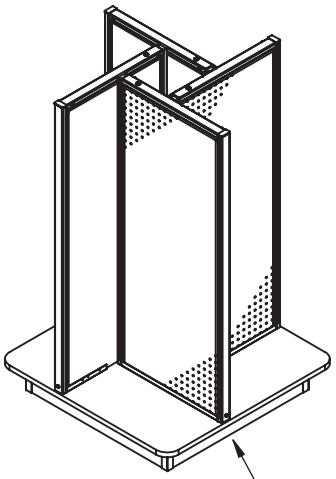

STEP 3

CONTINUE POSTIONING FRAMES FASTENING AT OUTSIDE EDGES ONLY ONE SCREW PER SIDE, (4) PLACES

FASTENING AT INSIDE HOLES IS NOT NECESSARY

STEP 4

ATTACH TOP PLATE WITH (4) SCREWS 1/4-20 X 1/2, INTO FRAME ENDS AS SHOWN

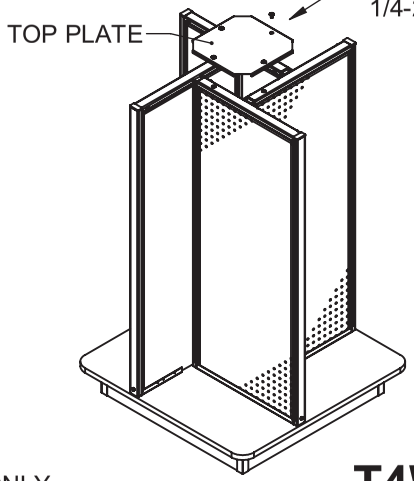

T4WM / TUBULAR 4-WAY MERCHANDISER INSTALLATION INSTRUCTIONS

MATERIAL: ERROR!:Material

madix

DRAWING IS EXCLUSIVE PROPERTY OF MADIX INC
PO BOX 177 GOODWATER, AL 35072 256-839-6354
PO BOX 729 TERRELL, TX 75160 214-515-5400
60 PROSPECT ST N. BROOKFIELD, MA 01535 508-867-8933

TOLERANCES UNLESS SPECIFIED
.XX = ±.060
.XXX = ±.030
.XXXX = ±.015
ANGULAR = 1°

DESIGNER: KLINER	CHANGE #: 500000003865		
DRAWN BY: KLINER	DESC: T4WM / INSTALLATION INSTRUCTIONS		
DATE: 20080318	DWG NO.: ASY-80012443	REV: 00	SHEET 1 OF 1