GLASS SHELF FRAME

ASY 026

INSTALLATION INSTRUCTIONS

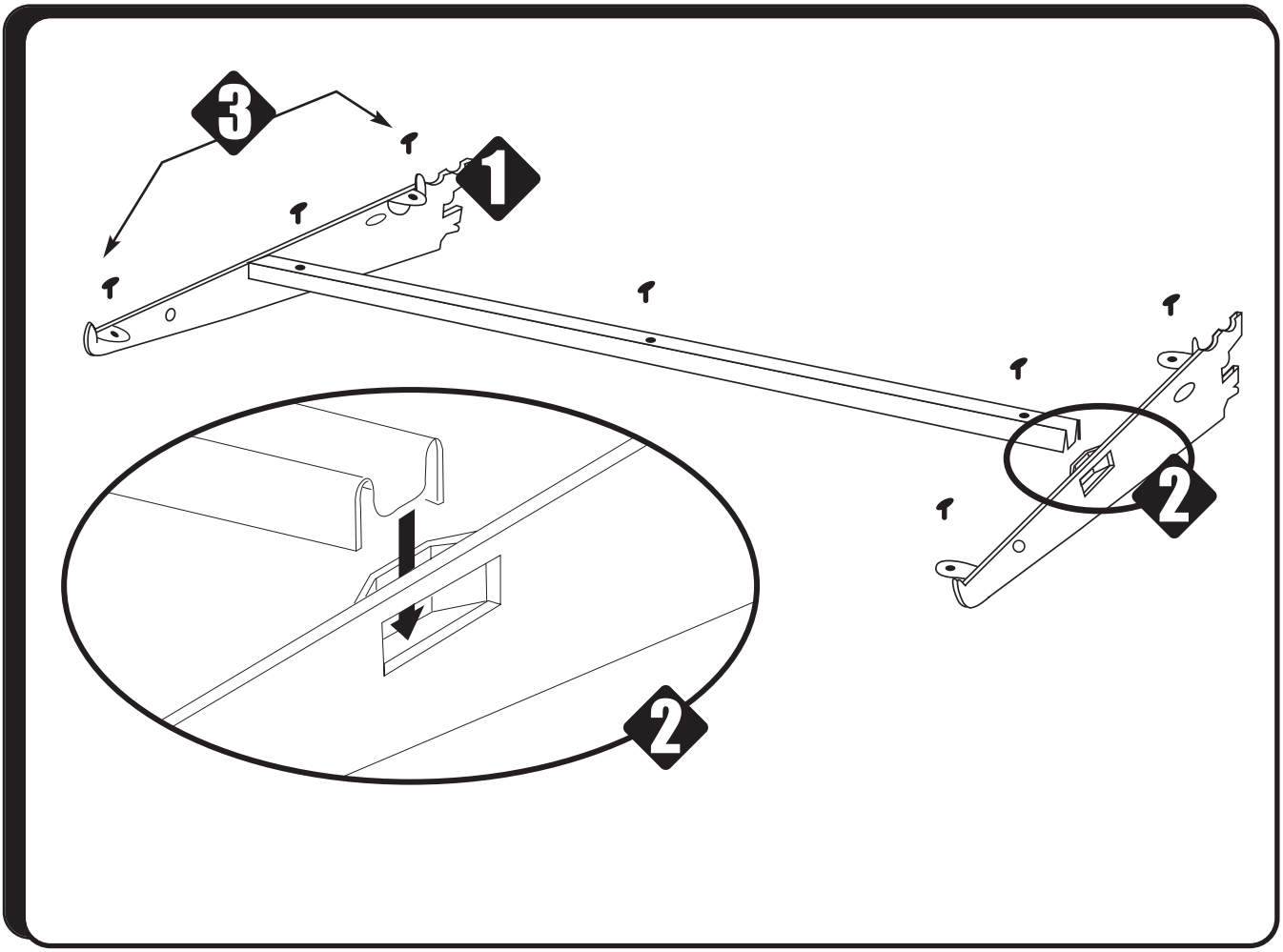

1 Install brackets in upright at desired height... one pair of brackets per shelf.

2 Mount spanners to brackets as shown, making sure top surface of spanner is parallel to top of bracket.

3 Install rubber bumpers. Lay the glass shelf top on the brackets, ensuring curved lips on the brackets contain the front and back edges of the glass.

ASSEMBLY COMPLETE

madix™ STORE FIXTURES
P.O. BOX 729 / TERRELL, TEXAS 75160 / 972.563.5744 / 800.776.2349
P.O. BOX 177 / GOODWATER, ALABAMA 35072 / 205.839.6354 / 800.633.6282

REV A

REV#	ECN#	REVISION	BY	DATE
A	4879	Revise Layout	ACM	6/15/00

REV#	ECN#	REVISION	BY	DATE